Paulmann

IP20

Info

www.paulmann.com

Paulmann Licht GmbH
Quezinger Feld 2
31832 Springe
Germany

www.paulmann.com

Art.-Nr.: **789.78**
789.79
789.80
706.90

PLIR 04/18

CE

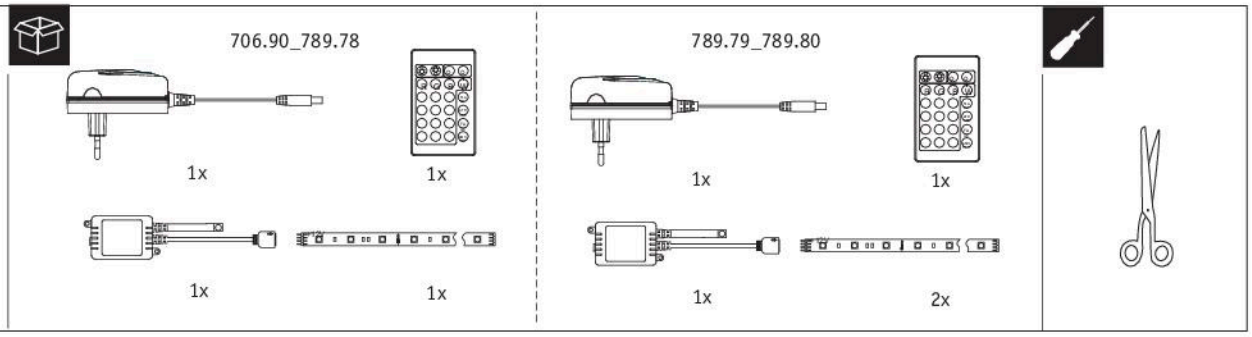

A

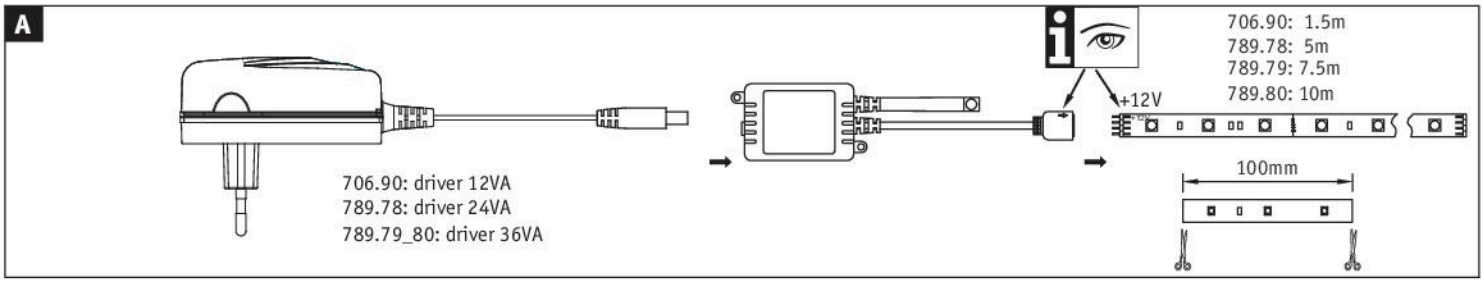

B

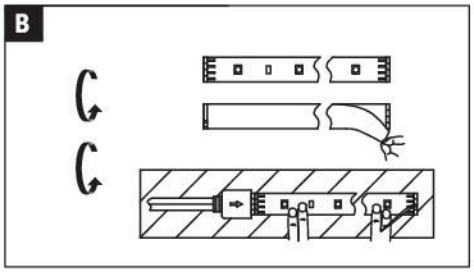

C

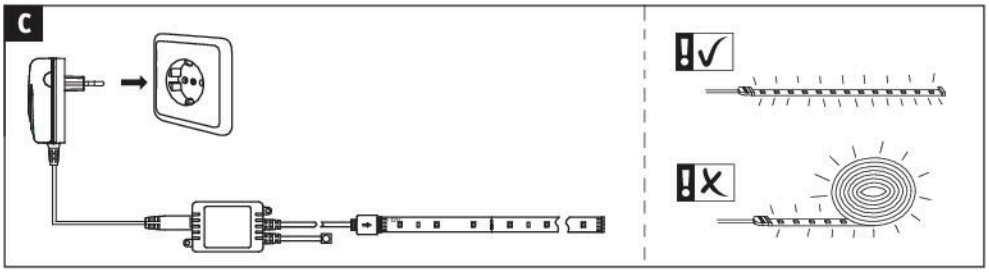

D

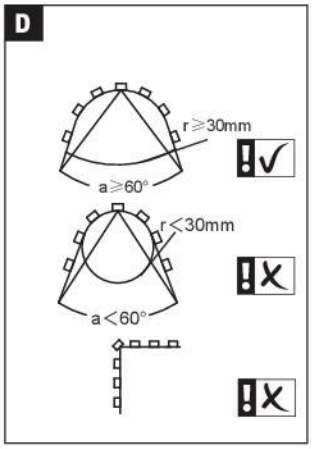

E

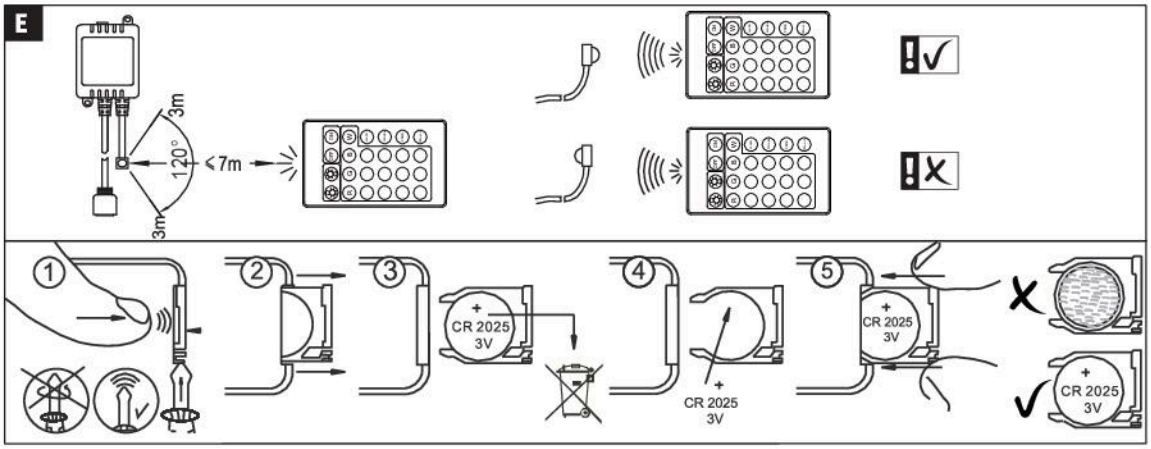

F

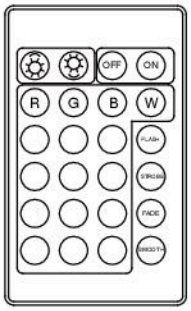

Brightness +		Brightness -		Shut down the load	OFF	Open load	ON
Static red	R	Static green	G	Static blue	B	Static white	W
Static orange		Static light green		Static deep blue		Three color jump	FLASH
Static dark yellow		Static cyan		Static brown		Three color gradient	STROBE
Static yellow		Static light blue		Static purple orchid		Seven color gradient	FADE
Static yellow		Static sky blue		Static purple		Seven colour jump to change	SMOOTH